Idaho National Engineering Laboratory

Managed by the U.S. Department of Energy

EGG-TMI-7359
January 1987

INFORMAL REPORT

TMI-2 ONCE THROUGH STEAM GENERATOR SECONDARY LEVEL ANALYSIS

James L. Anderson

EG&G Idaho

Work performed under DOE Contract No. DE-AC07-76ID01570

EGG-TMI-7359

TMI-2 ONCE THROUGH STEAM GENERATOR SECONDARY LEVEL ANALYSIS

James L. Anderson

Published January 1987

EG&G Idaho, Inc.
Idaho Falls, Idaho 83415

Prepared for the
U.S. Department of Energy
Idaho Operations Office
Under DOE Contract No. DE-AC07-76ID01570

ABSTRACT

During the Three Mile Island Unit 2 (TMI-2) accident, one of the major heat removal mechanisms was steaming from the two Once Through Steam Generators (OSTGs). As a result, accurate knowledge of the secondary side conditions is necessary for understanding of the accident and for use as boundary conditions in the analysis of the accident using reactor system thermal-hydraulic analysis codes. During the accident secondary side pressures and levels were recorded on a measurement system, called the reactimeter, at a sample rate of once per 3 seconds. There were two overlapping levels recorded for each steam generator; the operating level in percentage, and the start-up level in inches. Unfortunately these levels are not directly comparable since the operating level was measured in the downcomer and was compensated for changing liquid densities, and the start-up level was measured in the riser section and was setup for measurement of cold liquid. These two measurements have been converted into a common basis of the stratified level measured from the bottom tube sheet, and the converted measurements compare within their relative uncertainties following the feedwater pump trip. It has been determined that the measurements were fully operational and have been assigned a data qualification category of qualified by the Data Integrity Review Committee. An uncertainty analysis of the measurements resulted in uncertainties of ±23 cm for the converted operating level, and ±17 cm for the converted start-up level. Since these two levels have overlapping ranges it was possible to combine the measurements to obtain a best estimate composite secondary level. This level is graphically presented in the report.

CONTENTS

FIGURES

TABLES

TMI-2 ONCE THROUGH STEAM GENERATOR SECONDARY LEVEL ANALYSIS

1. INTRODUCTION

On March 28, 1979 a reactor accident occurred at the Babcock & Wilcox (B&W) designed Three Mile Island Unit 2 (TMI-2) nuclear power plant. This accident was initiated by a trip of the pumps supplying main feedwater to the Once Through Steam Generators (OTSGs). The subsequent failure to provide adequate decay heat removal capability ultimately resulted in severe damage to the nuclear core. Understanding of the accident thermal-hydraulics and fuel behavior is one of the primary responsibilities of the TMI Accident Evaluation Program (AEP), which is managed by EG&G Idaho. Because the steam generators were two of the main heat removal mechanisms during major portions of the accident, an estimate of the secondary side conditions is necessary for understanding of the accident and for use as a boundary condition in the analysis of the accident using reactor system thermal-hydraulic analysis codes, such as RELAP5. Although there were multiple level measurements in the secondary side, in addition to temperature and pressure measurements, previous comparisons of the levels have not resulted in close agreement. As a result, the AEP conducted a study of the steam generator secondary conditions to obtain an estimate of steam generator water levels for use as boundary conditions in the international standard problem effort. This report documents the level analysis results of the steam generator study.

1.1 Overview

During the TMI-2 accident, the secondary sides of the OTSGs boiled dry in the first 1 1/2 minutes, as a result of the feedwater pump trip and the inadvertent closure of the auxiliary feedwater block valves. Even though the auxiliary feedwater injection began 8 minutes into the accident, the steam generator levels did not begin increasing until about 25 minutes. Once the levels began to be reestablished, accurate knowledge of the actual

levels is required as a boundary condition for the standard problem analysis.[a] This report discusses the secondary liquid level measurement systems, and presents the best estimate of the liquid level history.

a. In a standard thermal-hydraulic code analysis the liquid level would be a computed parameter, given feedwater flow rates and secondary pressures. However, the auxiliary feedwater flow rates were not recorded. Therefore, use of the secondary liquid levels as a boundary condition is required for calculation of the feedwater flow rates.

2. MEASUREMENT DESCRIPTION

In each of the OTSGs at TMI-2 there were three different ranges and types of level measurements for the secondary level. These levels are shown in Figure 1, along with the locations of other pertinent measurements and steam generator components. All three measurements were based upon the hydrostatic pressure head due to the changing level in the secondary side. A Bailey differential pressure transmitter was used in each of the measurement ranges for measurement of the difference between the hydrostatic head in a "reference leg," external to the steam generator, and the hydrostatic head of the level to be measured. Each measurement used a different transmitter range.

The measurement used during normal full power operation was referred to as the operating level. This measurement (identification of SP-1A-LT2 for the A-loop OTSG) provided percentage readings (0-100% which corresponds to a level of 259-1001 cm above the tube sheet) of the level in the downcomer section of the OTSG. A Bailey differential transmitter, calibrated for a +10 to -10 volt output under a 3-744 cm (1.4-292.9 inch) input, was used for the operating level measurement. The fluid temperature measured in the bottom of the downcomer (SP-3A-TE) was used to provide compensation of the level due to changing liquid density as secondary conditions changed. The operating level was plumbed into the system with the top tap (corresponding to the top of the reference leg) entering the riser section of the secondary side just above the aspirator section into the downcomer. The bottom tap entered the downcomer section just above the adjustable orifice in the bottom of the downcomer. This orifice was used to adjust the liquid level in the downcomer during normal full power operation. No data on the pressure drop (or resistance) across the orifice are available. However, the orifice loss coefficient is calculated in Section 3.4.2 based upon analysis of the level measurements. During normal operation the operating level measurement is not directly comparable to the other measurements, due to the pressure drop across the adjustable orifice in the bottom of the downcomer and the temperature compensation performed on the operating level. A block diagram of the measurement system is shown in Figure 2 for the operating level measurement. There were two redundant operating level measurements (SP-1A-LT2 and SP-1A-LT3), with the

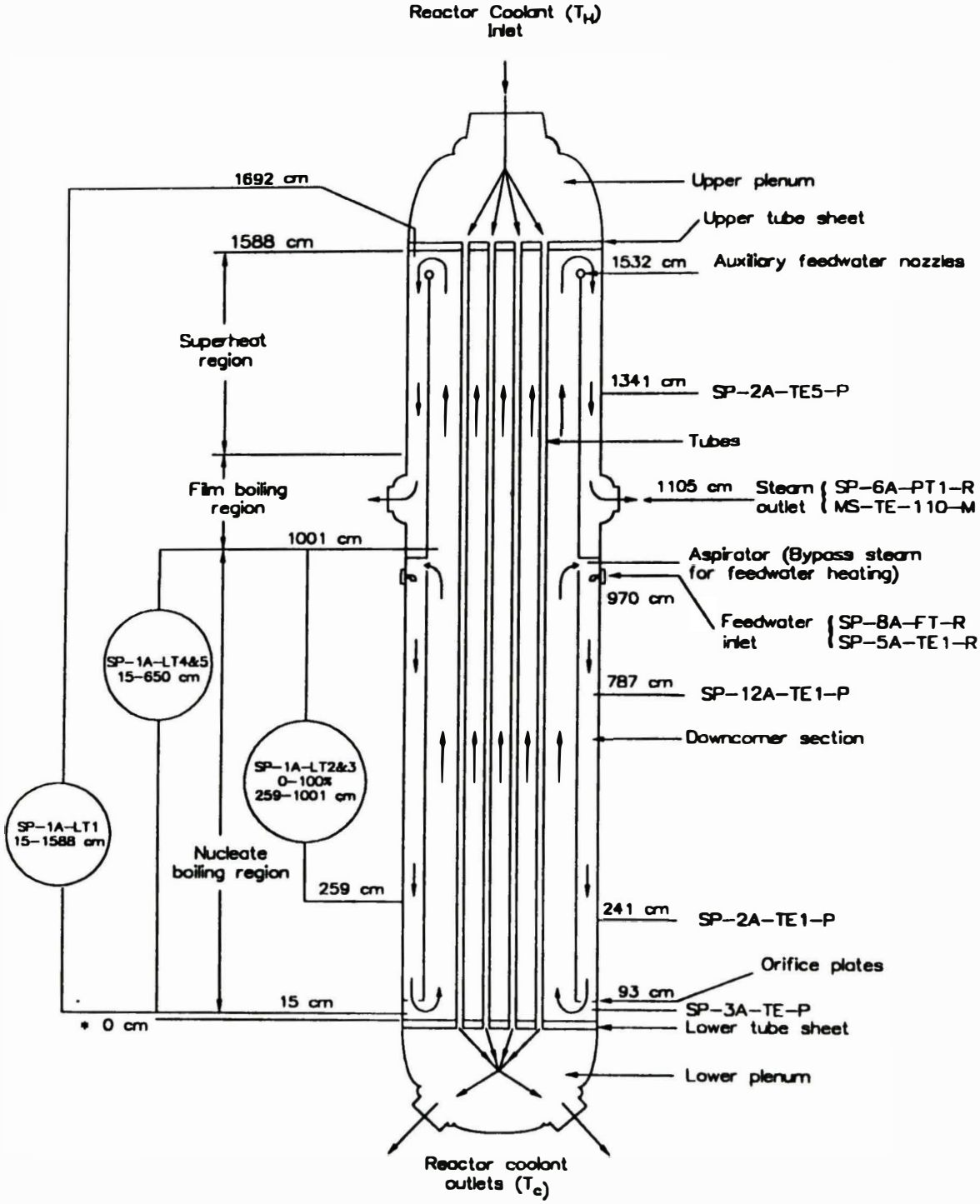

* Corresponds to an elevation of 89.69 m (294'3") above sea level

Figure 1. TMI-2 OTSG measurement locations.

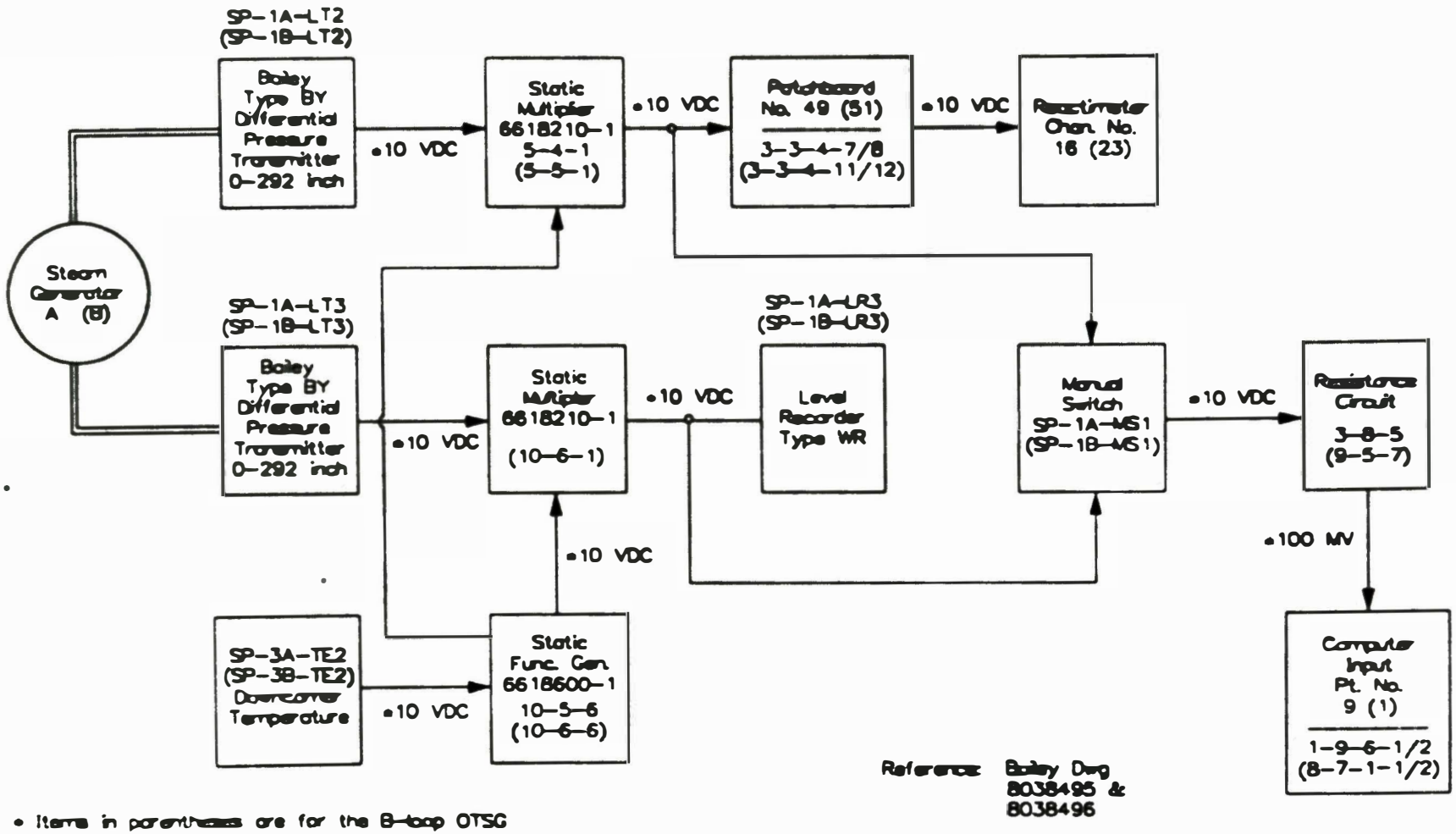

Figure 2. Measurement block diagram of steam generator operating levels SP-1A-LT2/LT3 (SP-1B-LT2/LT3).

temperature compensation being performed in the nonnuclear instrumentation analog circuitry for each measurement. The output from SP-1A-LT2 was recorded on the reactimeter at a sample rate of 1 sample per 3 seconds. The measurement transmitted to the plant computer could have been either LT2 or LT3 (a manual switch, the position of which was not recorded, determined which measurement went to the plant computer).

During plant start-up, the level measurement referred to as the start-up range (SP-1A-LT4) was used as an indication of the secondary level, with a range of 15-650 cm (6-256 inches) above the bottom tube sheet in the riser section. This measurement shared a common upper tap into the riser section with the operating level measurement; the lower tap entered the secondary side riser section 15 cm above the tube sheet, just below the downcomer section. The Bailey differential pressure transmitter was calibrated for a +10 to -10 volt output under a 347-982 cm (136.6-386.6 inch) input. A block diagram of the start-up level is shown in Figure 3. There were two redundant start-up level measurements in each OTSG (SP-1A-LT4 and SP-1A-LT5 for the A-loop OTSG), of which SP-1A-LT4 was recorded on the reactimeter. One of these measurements was recorded on the plant computer, through the use of a manual switch, the position of which was not recorded. The start-up range was not temperature compensated.

The third level measurement (SP-1A-LT1) was referred to as the full range level. This measurement was mainly intended for indication of secondary level during wet lay up of the steam generator during reactor shutdown. The full range level measurement shared a common bottom tap with the start-up level measurement, and provided a measurement range of 15-1539 cm (6-606 inches) above the bottom tube sheet. The top tap entered through the upper tube sheet (flush with the inner surface) above the steam outlet region. This level was intended for cold conditions, and thus was not compensated for density changes. The Bailey transmitter was calibrated for a +10 to -10 volt output under an input load of 160-1629 cm (63.1-641.2 inch). A block diagram of the full range level is shown in Figure 4, which shows that this measurement was only recorded on the plant computer. Recording of this measurement only occurred on the utility printer as part of the hourly logs.

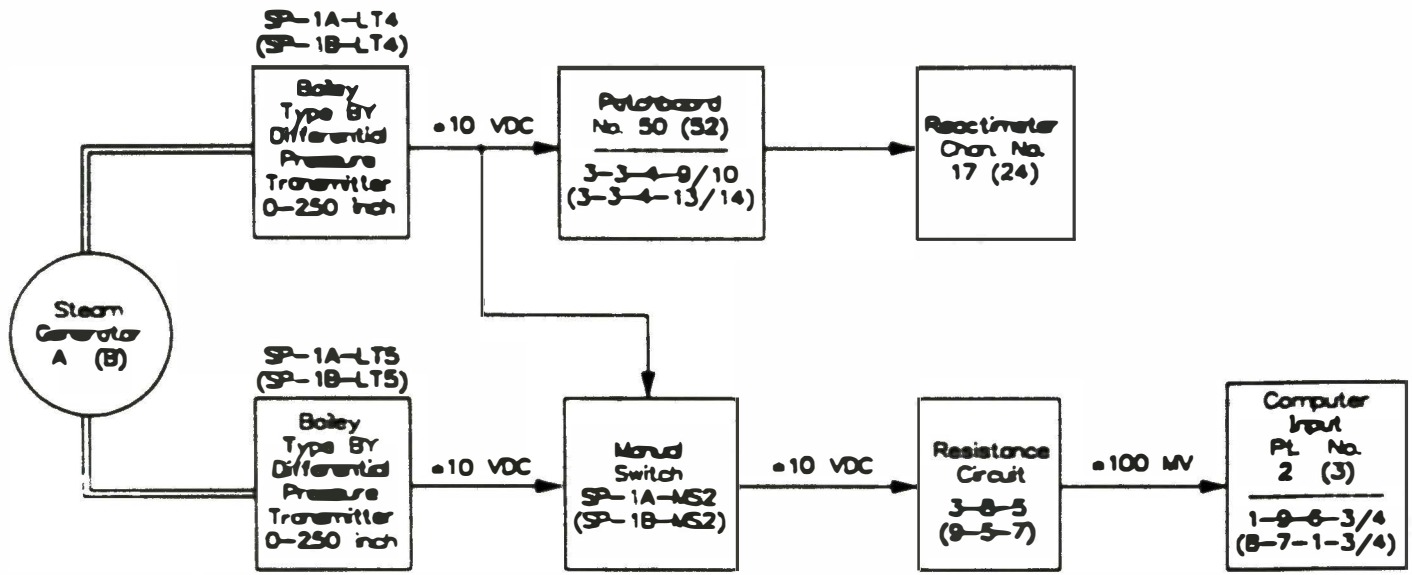

• Items in parentheses are for the B-loop OTSG

Reference: Bailey
Dwg 8038495D

Figure 3. Measurement block diagram of steam generator start-up levels SP-1A-LT4/LT5 (SP-1B-LT4/LT5).

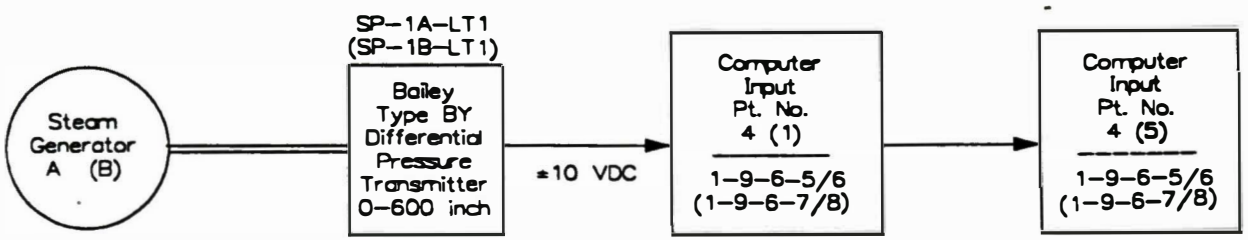

Reference: Bailey Dwg 8038496D

• Items in parentheses are for the B-loop OTSG

Figure 4. Measurement block diagram of steam generator full range level SP-1A-LT1 (SP-1B-LT1).

3. MEASUREMENT ANALYSIS

The primary purpose of this study is to obtain the time history of the secondary liquid levels, which requires converting all three measurements to a common basis for comparison. The full range level and start-up levels should be directly comparable during normal full power operation. However, the values prior to the feedwater pump trip are very different (SP-1A-LT1 = 653 cm as compared to SP-1A-LT4 = 406 cm). This discrepancy is apparently due to the installation configuration of the top tap of the full range level. This tap is mounted vertically, with the penetration through the upper tube sheet and pointing down at the top of the steam downcomer section. This configuration could act as a reverse pitot tube, lowering the pressure on the reference leg side of the differential pressure transmitter due to the high steam velocities moving downward. As a result, the full range level would read low whenever the steam generator was steaming. Therefore, the full range level needs to be used with caution, and will not be used as a primary data source to obtain the secondary level.

The problem with comparing the start-up and operating levels is twofold. First, the pressure drop across the orifice is unknown during feedwater flow. Prior to the pump trip, the level in the downcomer section was considerably higher than in the riser section, due to this pressure drop. However, once the feedwater pump tripped the two levels should have equalized within a reasonably short time frame (definitely by the time the OTSGs had boiled dry), and the levels should be comparable; at least once the secondary level increased to the bottom tap of the operating level at 259 cm. The second problem with direct comparison of the levels is the temperature compensation of the operating level to compensate for changing liquid density as secondary pressures and temperatures change. This compensation is performed using a number of analog components, as shown in Figure 2. Study of the manuals for these modules (the Static Function Generator[1] and the Static Multiplier[2], in conjunction with the calibration voltages[3] used during setup of these units, reveals that the

temperature compensation resulted in the collapsed liquid level.[a] In other words, the hydrostatic head due to the combined effects of the steam and liquid columns was considered to be solely due to a liquid column of the measured height. The setup of the electronics appears to have been performed properly. Therefore, it was assumed that the collapsed liquid level was properly calculated and the stratified liquid level will be calculated from the recorded measurement (the stratified level is the actual level of the liquid interface with the steam space above the interface). The electronics setup and electronic calibration coefficients are factored into the uncertainty analysis.

3.1 Conversion of the Operating Level

For comparison of the various level measurements in each steam generator, each of the measurements must be converted to a common basis. The common basis chosen was the stratified liquid level[b] measured from the bottom tube sheet. The minimum measurement level for the operating level is 259 cm (102 inches). The minimum measurement level for the start-up and full range levels is 15.2 cm (6 inches).

Since the operating level was temperature compensated to provide a collapsed liquid level,[c] the only conversion required is to convert to the stratified level, and add the offset from the bottom tube sheet (259 cm). This results in a conversion equation for the interface level in the downcomer, L_{D-op}, of:

---

a. Note that the temperature compensation performed on the pressurizer level resulted in the interface liquid level, not the collapsed liquid level. The difference being how the steam head was handled.

b. This level is the height of the steam/liquid interface assuming no voids in the liquid, with a blanket of steam above the liquid interface.

c. The collapsed liquid level is the height of the liquid which would result if all of the steam mass was condensed and combined with the liquid.

$$L_{D\text{-}op} = \frac{L_D \cdot \rho_f - H_{op} \cdot \rho_g}{\rho_f - \rho_g} + 259 \text{ cm} \qquad (1)$$

where the collapsed liquid level in the downcomer, L_D, is obtained from the recorded operating level in percentage, SP-1A-LT2, from

$$L_D = \text{SP-1A-LT2}/100 \cdot H_{op} \qquad (2)$$

and where

H_{op} = the operating level span in cm (= 742 cm)

ρ_f, ρ_g = the liquid and steam densities, respectively (kg/m^3).

Equation (1) results in the interface level in the downcomer measured from the bottom tube sheet. Following the feedwater pump trip, this level should be the same as the level in the riser section of the steam generator secondary. However, prior to the feedwater pump trip, conversion to the level in the riser section, $L_{R\text{-}op}$, must account for the pressure drop across the downcomer orifice. The downcomer and riser levels are related by,

$$L_{R\text{-}op} = L_{D\text{-}op} - \frac{DP_{or} + DP_{riser}}{\rho_f - \rho_g \cdot g} \qquad (3)$$

where

DP_{or} = the differential pressure across the downcomer orifice (Pa or kg/m-s^2)

DP_{riser} = the differential pressure across the riser section between the bottom of the downcomer and the aspirator elevation (Pa)

g = the gravitational acceleration (=9.8 m/s^2).

The above analysis assumes that the pressure in the top of the downcomer section is the same as in the riser section at the same elevation. The only mechanism available to create a difference would be a pressure drop across the aspirator, or feedwater heating, section. Analysis documented in Appendix A (assuming thermodynamic equilibrium to calculate the steam flow rate into the downcomer) calculates a 4 cm pressure drop (at 560 K or 0.04 psid) across the aspirator section. Therefore, the above assumption should be valid.

3.2 Conversion of Start-up Levels

The start-up level measurements provide a measurement of the cold liquid level in the riser section of the OTSG secondary. The differential pressure transmitter is under ranged for the level span between the bottom and top sense line taps. In other words, the transmitter was ranged for a maximum level of 635 cm (250 inches) whereas the distance between taps is 986 cm (388 inches). Essentially the recorded start-up level is the full range (635 cm) minus the measured differential pressure in cm of cold water. The interface level in the riser section, L_{R-su}, can be obtained from the recorded start-up level, L_{su}, as;

$$L_{R-su} = \frac{L_{su} \cdot \rho_c - H_{su} \cdot \left(\rho_c - \rho_r - \rho_g\right)}{\left(\rho_f - \rho_g\right)} + 15.2 \qquad (4)$$

where

ρ_c = the density of cold water (= 998.6 kg/m^3 @ 293K)

ρ_r = the density of reference leg water (= 990.3 kg/m^3 @ 325K)

H_{su} = the distance between taps (= 985.5 cm).

The level resulting from Equation (4) is directly comparable to the operating level resulting from Equation (1), using the operating level following the feedwater pump trip. Results from these two equations, using the data recorded on the reactimeter, will be compared in Section 3.4 of this report.

3.3 Conversion of the Full Range Level

The single full range level measurement in each OTSG was only recorded during the accident at hourly intervals on the utility printer. Therefore, it is limited in usefulness in verifying other measurements. In addition, this measurement apparently gave erroneous measurements during periods of steam flow out of the OTSG. However, the few values available can extend the level range above the upper measurement range of the operating level measurement, and these values will be converted into the common level basis previously discussed. This is accomplished using the following conversion equation.

$$L_{R-fs} = \frac{L_{fs} \cdot \rho_c - H_{fs} \cdot (\rho_g + \rho_c - \rho_r)}{\rho_f - \rho_g} + 15.2 \qquad (5)$$

where

L_{R-fs} = the interface level in the riser section from the full range level (cm)

L_{fs} = the cold full range level, SP-1A-LT1 (cm)

H_{fs} = the distance between taps (= 1,468 cm).

3.4 Comparison and Composite Best Estimate Levels

The results from converting the recorded operating level and start-up level for the A-loop OTSG are compared in Figure 5 for the first 1000 minutes of the accident. The results from Equation (5) for the hourly full range levels are also shown in Figure 5. Generally there is very good agreement between the operating and start-up levels during periods of overlapping range. Notice the difference prior to the feedwater pump trip (at time 0). This difference reflects the difference in levels between the downcomer level and the riser level. Knowledge of this level difference and the feedwater flow rate allows calculation of the loss coefficient across the downcomer orifice. This will be discussed further in

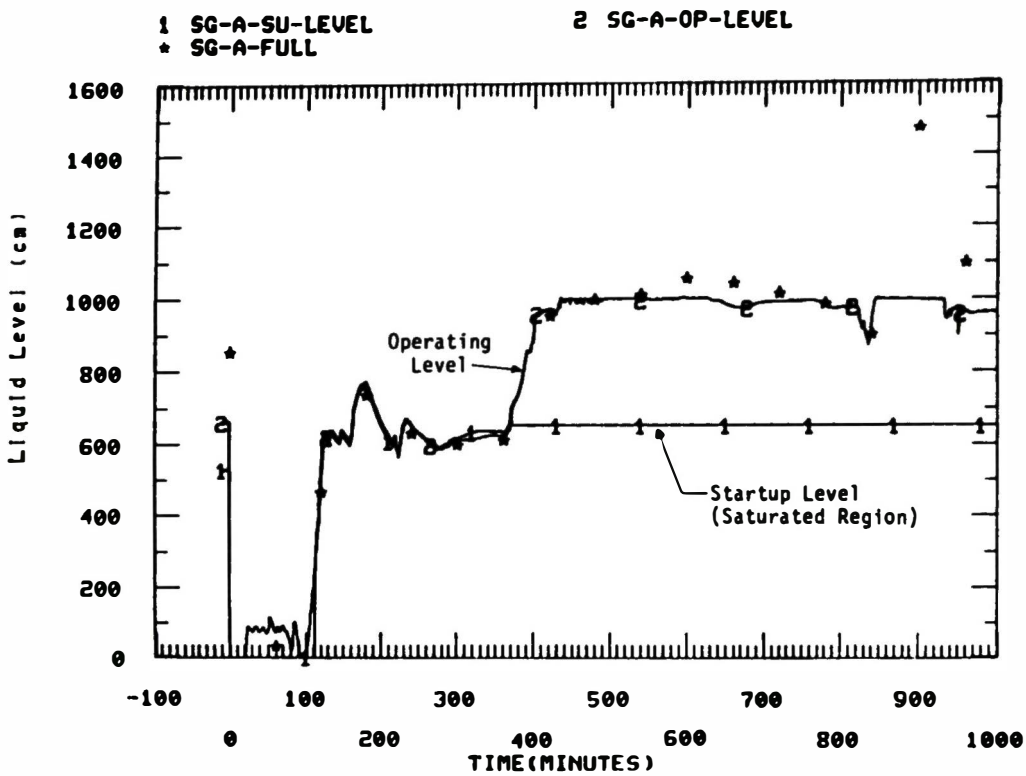

Figure 5. Steam generator--A converted secondary liquid levels.

Section 3.4.2. Between 100 and 370 minutes, when both the operating and start-up levels are within range, the comparison is very good for all three level measurements. After 370 minutes the secondary level had increased above the range of the start-up level transmitter, and remained there during the rest of the first day of the accident. During the period of 100-370 minutes, comparison of the operating and full range levels is reasonably good, although the full range level tends to result in higher levels after 600 minutes. This is probably due to the effect of steaming, as previously discussed, and as is demonstrated prior to the feedwater pump trip. At 850 minutes the secondary level increased above the upper tap of the operating level, and this measurement was saturated until about 930 minutes when it returned on scale. During this period (at 900 minutes) there was a single full range level measurement recorded on the utility printer. This measurement indicated a 500 cm level increase from when the operating level saturated. Note that the next available full range measurement (at 960 minutes) was nearly 150 cm higher than the operating level measurement which had returned on scale.

The three level measurements recorded for the B-loop OTSG are compared in Figure 6. Again the comparison is very good during the periods of overlapping range. The same type of difference in downcomer and riser levels prior to the feedwater pump trip is observed for the B-loop OTSG as was observed for the A-loop. The discrepancy between the operating and start-up levels between 70-100 minutes was a result of the level fluctuating about the minimum operating level, and being set to zero when below the minimum level measurement. At about 700 minutes the start-up level transmitter saturated (the drop in start-up level at this time is due to the level at which the calculation defaulted). In general the full range level followed the other two levels, with most of the full range data points being lower than the operating level.

The best estimate composite levels for both OTSGs are compared in Figure 7 for the first 300 minutes, and in Figure 8 for the first 1000 minutes. The level chosen prior to the pump trip was the riser level from the start-up level. The criteria for creating the composite level was to use the start-up level for levels less than 550 cm, and the operating

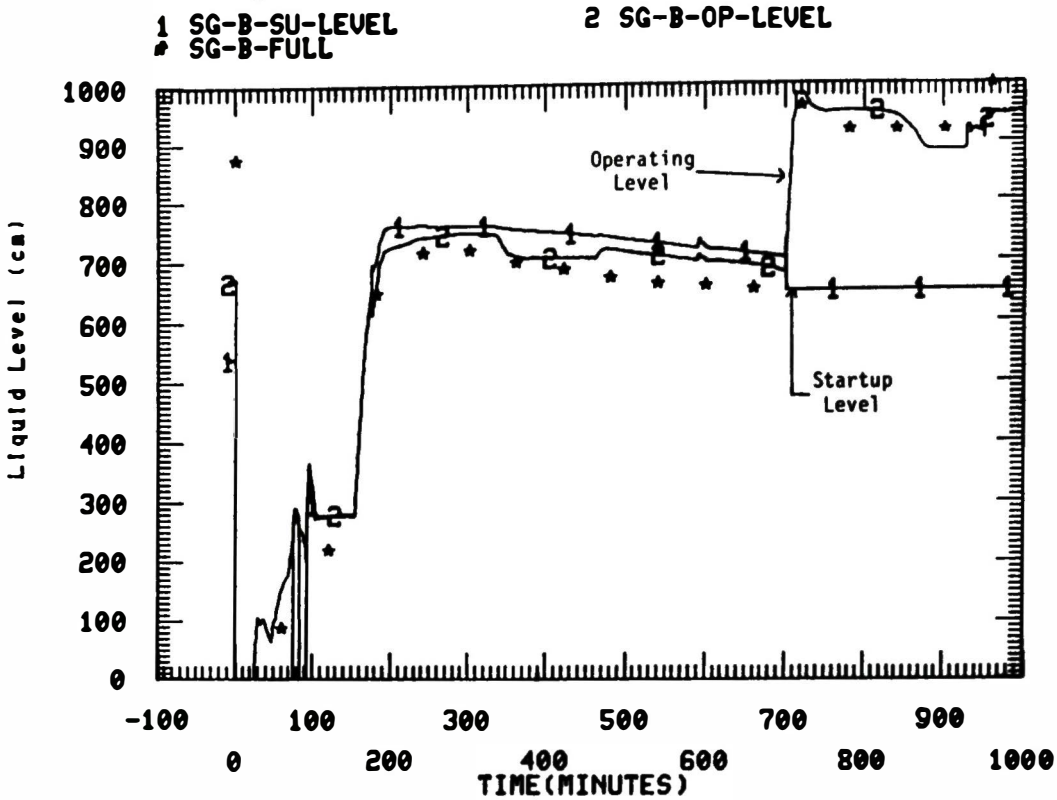

Figure 6. Steam generator--B converted secondary liquid levels.

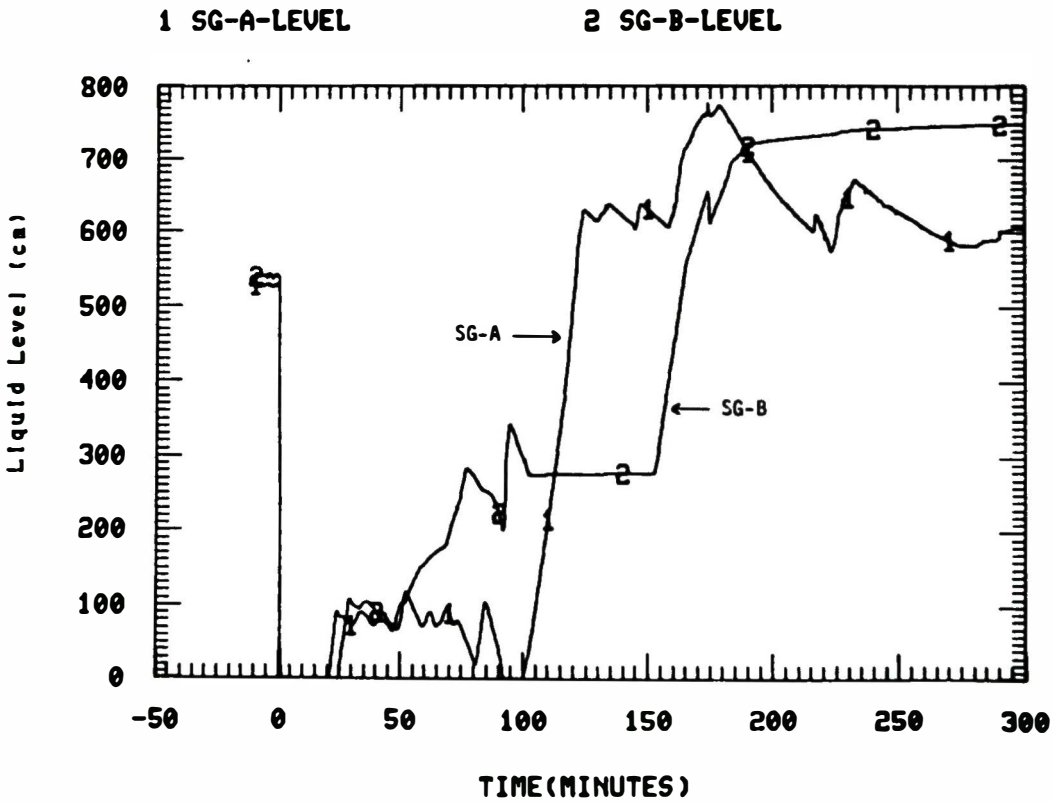

Figure 7. Steam generators A and B best estimate of secondary levels (300 minutes).

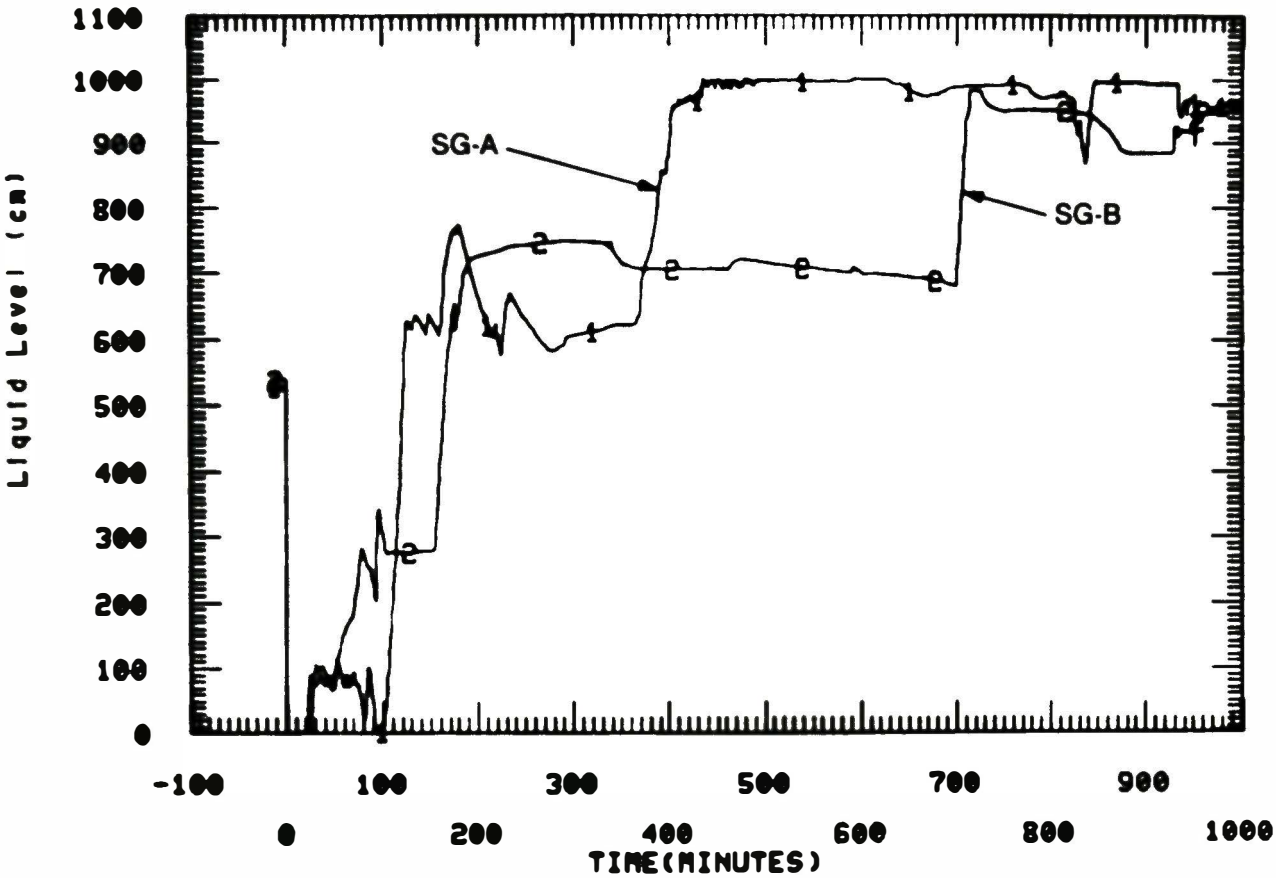

Figure 8. Steam generators A and B best estimate of secondary levels (1000 minutes).

level for levels greater than 550 cm. No adjustment was made in the A-loop level during the period when the operating level was saturated.

3.4.1 Initial Conditions for Standard Problem

In order to perform thermal-hydraulic code calculations of the accident the initial plant conditions prior to the feedwater pump trip are required. The initial conditions for the secondary sides of the two OTSGs are tabulated in Table 1 for the three analysis segments of the standard problem (0, 100, and 174 minutes).

3.4.2. Downcomer Orifice Loss Coefficient

In order to properly model the secondary side of the OTSGs, knowledge of the flow area and loss coefficient of the downcomer orifice is required. The downcomer orifice consists of two concentric plates, each with 24 rectangular holes of 10 x 21.6 cm (4 x 8 1/2 inch) dimensions. The upper plate is movable relative to the lower plate, thus the orifice flow area is adjustable. The purpose of this adjustment is to allow adjustment of the pressure drop across the orifice, and thus the downcomer level, to increase system stability at full power operation. The adjusted position existing at the time of the accident is unknown. However, the orifice position was initially set during fabrication to an opening size of 10 x 10.8 cm (4 x 4 1/4 inch) (see Reference 4). In this analysis, this opening size will be used to calculate the flow area, and a loss coefficient calculated based upon this flow area (A_{or} = 2,632 cm^2) and the measured parameters. The methodology uses the difference in the initial downcomer and riser levels as the differential pressure across the orifice, and combining with the total orifice mass flow rate, $\dot{m}_{or}$, calculated from the feedwater flow rate and temperature and a thermodynamic balance assuming saturated steam flowing through the aspirator. The $\dot{m}_{or}$ calculations are documented in Appendix A. The loss coefficient, K, is defined by:

$$K = \frac{2 \cdot \rho_f \cdot DP_{or}}{\dot{m}_{or}/A_{or}^2} \qquad (6)$$

TABLE 1. OTSG SECONDARY INITIAL CONDITIONS FOR STANDARD PROBLEM

Parameter	Time (min.)	A-Loop	B-Loop
Pressure (MPa)	0[a]	6.38 ± 0.11 (σ=.015)	6.24 ± 0.11 (σ=.011)
	100	5.96 ± 0.11	1.27 ± 0.11
	174	2.58 ± 0.11	1.07 ± 0.11
Level - Riser (cm)	0	525.8 ± 9[b] (σ=1.79)	538.3 ± 9 (σ=2.09)
	100	0 ± 17	300 ± 17
	174	765 ± 23	655 ± 23
Level-Downcomer (cm)	0	660.0 ± 12 (σ=1.95)	668.7 ± 12 (σ=2.02)
Main Feedwater Flow Rate (kg/s)	0	722.4 ± 13.4 (σ=4.5)	717.6 ± 13.4 (σ=4.0)
Main Feedwater Temperature (K)	0	513 ± 1 (σ=.05)	513 ± 1
Exhaust Steam Temperature (K)	0	586 ± 1.2	586 ± 1.2
Auxiliary Feedwater Flow Rate (kg/s)[c]	0	0	0
	100	19.8	0
	174	6.6	8.2[d]

a. σ is the standard deviation of the initial condition data from -10 to -0.1 minutes.

b. Uncertainties for parameter prior to feedwater pump trip are based on a reactor building temperature of 325 K (125°F) rather than the maximum temperature of 353 K (175°F) used in the rest of the uncertainty analysis.

c. The auxiliary feedwater flow rate was not recorded, and estimates of the flow rate are from the analysis documented in Reference 5. An uncertainty analysis is currently unavailable.

d. Starting at 175.3 minutes.

where the differential pressure across the orifice, ΔP_{or}, is obtained from the initial levels by:[a]

$$\Delta P_{or} = \rho_f \cdot g \cdot (L_{D-op} - L_{R-su}) \quad . \tag{7}$$

The loss coefficients resulting from this analysis are:

K_A = 1.483

K_B = 1.485.

---

a. This analysis assumes that the frictional pressure drop in the riser section below the aspirator entrance, ΔP_{riser}, is negligible.

4. UNCERTAINTY ANALYSIS

The liquid level measurement system for the OTSGs has been previously described. The usefulness of data is a direct function of how accurate the data are and how well that accuracy (or inversely the uncertainty) is known. The uncertainty in the calculated level is a function of a number of possible error sources. In this section, potential error sources will be evaluated and combined to obtain the total estimate of the uncertainty in the calculated level. The method used for combining individual uncertainties for the liquid levels is the root-sum-square (RSS) method. All quoted uncertainties are at the 95% confidence level. Reference 6 is the document which forms the basis for uncertainty analysis in the TMI-2 AEP. The methodology was developed from References 7 and 8.

Possible error sources which needed to be evaluated included the following:

1. Possible errors in the differential pressure measurement introduced by the Bailey differential pressure transmitter. These include basic transmitter accuracy, amplifier adjustment, pressure sensitivity, and environmental effects (predominately temperature).

2. Possible errors introduced in the level calculation circuity from the electronic setup and assumptions used, and errors introduced from the temperature measurement in the steam generator downcomer for the operating range.

3. Possible errors introduced in the recording system, in this case the reactimeter.

4. Possible errors introduced in the conversion to stratified level referenced from the bottom tube sheet.

Sources of information for evaluation of uncertainty components are the Bailey transmitter instruction manual[9], the Bailey Elevated environment qualification report[10], and the Surveillance Procedure - Steam Generator Water Level.[11]

Each of the aforementioned potential error sources are listed in Tables 2, 3, and 4 and estimates of the resulting uncertainty are given for each of the secondary level measurements. Since statistically valid test data does not exist, all estimates are given as bias rather than precision components. The uncertainty estimates for the operating level are summarized in Table 2, with a resulting uncertainty of ±23 cm. The uncertainty estimates for the converted start-up level are summarized in Table 3, with a resulting uncertainty of ±17 cm. The uncertainty estimates for the converted full range level are summarized in Table 4, with a resulting uncertainty of ±37 cm.

TABLE 2. UNCERTAINTY ANALYSIS - SECONDARY OPERATING LEVEL

Uncertainty Component	Uncertainty Estimate (bias)[a]
Differential Pressure Transmitter (Bailey Type BY)	
Accuracy[b]	0.5 % FS
Electronic Setup (tolerance)[c]	0.25% FS
Temperature Sensitivity[d]	1.1 % FS
Pressure Sensitivity[e]	0.1 % FS
Stability (long term drift)[f]	0.25% FS
Temperature Compensation Circuitry	
Static Function Generator (tolerance)[g]	0.5 % FS
Input Temperature Signal[h]	0.8 % FS
Static Multiplier (tolerance)[i]	0.5 % FS
Reference Leg Density[j]	2.0 % FS
Reference Leg Level (±10 cm)[k]	1.4 % FS
Recording on Reactimeter[l]	0.11% FS
TOTAL BASE UNCERTAINTY	2.95% FS
Conversion to Interface Level	
Distance between Taps[m]	0.1 % FS
Secondary Phase Densities[n]	0.75% FS
TOTAL UNCERTAINTY	3.05% FS (±23 cm)

a. The uncertainty estimates given were obtained from various sources, which are listed in the following footnotes. The uncertainty estimates are given for the 95% confidence level, and are all considered to be bias estimates due to the total lack of any statistically significant data. Estimates are given in terms of percent of full scale (FS), with FS=742 cm used.

b. The source of uncertainties in the transmitter (accuracy) is the Bailey transmitter manual (see Reference 9).

c. The tolerance in electronic setup of the transmitter amplifier is given on the instrument calibration data sheet.

TABLE 2. (continued)

d. This estimate is based upon the stated temperature effects within the operational range of -20 - 160°F, of 0.01% FS/°F (see Reference 9). The maximum reported (see Reference 10) error for elevated temperatures (270°F), under postulated accident conditions, is 5% observed zero offset. Since the maximum observed reactor building temperature was 175°F, the 5% value is probably much too large, therefore a value of the stated temperature effect within the operational range is used [1.1% FS = (.01% FS/°F • (175-68°F))].

e. The pressure sensitivity is calculated using the value given in Reference 9 as, (1.05×10^{-4} % FS/psi • 910 psi) = 0.1% FS.

f. Drift is based upon 0.15%/3 months given in Reference 9 with a 5 month period since the last instrument calibration.

g. No data sheet could be found for the setup of the static function generator, therefore an assumed tolerance of 0.5% FS is used.

h. The temperature signal input to the static function generator was from SP-3A-TT1, the downcomer temperature. Stated tolerance (see Reference 11, data sheet 13) is ±6°F input to the computer. This uncertainty results in an uncertainty in the density correction as a function of temperature (and thus reading). The stated value is used as a percent of full scale for conservatism.

i. Stated tolerance for the electronic setup of the static multiplier is from Reference 11, data sheet 17.

j. Assumed reference leg temperature is 105°F (see Reference 3, Figure SP1). Maximum recorded reactor building temperature was 175°F. Assuming this temperature was the actual reference leg temperature during portions of the accident, and a secondary pressure of 900 psia, results in the tabulated uncertainty of 2% FS.

k. An uncertainty component for uncertainty in the liquid level in the reference leg of the differential pressure sense line of ±10 cm is included. This is based upon engineering judgment of possible voiding in the reference leg during depressurization.

l. The uncertainties associated with recording on the reactimeter are assumed to be the same as for recording on the plant computer. No uncertainty information on the reactimeter is available. This includes manuals, drawings, model number, and serial number of the unit installed by B&W during the accident. The uncertainty estimate for the plant computer is based upon Reference 12.

m. An uncertainty in knowledge of the distance between sense line taps of 1 cm is assumed.

TABLE 2. (continued)

n. The secondary phase densities used in Equation (1) were obtained from the steam tables using the measured secondary pressure and assuming saturation conditions. From Reference 13, the uncertainty in the pressure measurement is ±0.11 MPa which results in an uncertainty in the phase density difference of 0.75% at a pressure of 1 MPa. This value is used as a percent of full scale for conservatism.

TABLE 3. UNCERTAINTY ANALYSIS - SECONDARY START-UP LEVEL

Uncertainty Component	Uncertainty Estimate (bias)[a]
Differential Pressure Transmitter (Bailey Type BY)	
Accuracy[b]	0.5 % FS
Electronic Setup (tolerance)[c]	0.25% FS
Temperature Sensitivity[d]	1.1 % FS
Pressure Sensitivity[e]	0.1 % FS
Stability (long term drift)[f]	0.25% FS
Recording on Reactimeter[g]	0.11% FS
TOTAL BASE UNCERTAINTY	1.26% FS
Conversion to Interface Level [Equation (4)]	
Reference Leg Density[h]	1.6 % FS
Reference Leg Level (±10 cm)[i]	1.6 % FS
Distance between Taps[j]	0.1 % FS
Secondary Phase Densities[k]	0.75% FS
TOTAL UNCERTAINTY	2.70 % FS (±17 cm)

a. The uncertainty estimates given were obtained from various sources, which are listed in the following footnotes. The uncertainty estimates are given for the 95% confidence level, and are all considered to be bias estimates due to the total lack of any statistically significant data. Estimates are given in terms of percent of transmitter full scale (FS), with FS=635 cm used.

b. The source of uncertainties in the transmitter (accuracy) is the Bailey transmitter manual (see Reference 9).

c. The tolerance in electronic setup of the transmitter amplifier is given on the instrument calibration data sheet.

d. This estimate is based upon the stated temperature effects within the operational range of -20 - 160°F, of 0.01% FS/°F (see Reference 9). The maximum reported (see Reference 10) error for elevated temperatures (270°F), under postulated accident conditions, is 5% observed zero offset. Since the maximum observed reactor building temperature was 175°F, the 5% value is probably much too large, therefore a value of the stated temperature effect within the operational range is used [1.1% FS = (.01% FS/°F • (175-68°F))].

TABLE 3. (continued)

e. The pressure sensitivity is calculated using the value given in Reference 9 as, (1.05×10^{-4} % FS/psi • 910 psi) = 0.1% FS.

f. Drift is based upon 0.15%/3 months given in Reference 9, with a 5 month period since the last instrument calibration.

g. The uncertainties associated with recording on the reactimeter are assumed to be the same as for recording on the plant computer. No uncertainty information on the reactimeter is available. This includes manuals, drawings, model number, and serial number of the unit installed by B&W during the accident. The uncertainty estimate for the plant computer is based upon Reference 12.

h. Assumed reference leg temperature is 125°F for Equation (4). Maximum recorded reactor building temperature was 175°F. Assuming this temperature was the actual reference leg temperature during portions of the accident, and a secondary pressure of 900 psia, results in the tabulated uncertainty.

i. An uncertainty component for uncertainty in the liquid level in the reference leg of the differential pressure sense line of ±10 cm is included. This is based upon engineering judgment of possible voiding in the reference leg during depressurization.

j. An uncertainty in knowledge of the distance between sense line taps of 1 cm is assumed.

k. The secondary phase densities used in Equation (4) were obtained from the steam tables using the measured secondary pressure and assuming saturation conditions. From Reference 13, the uncertainty in the pressure measurement is ±0.11 MPa which results in an uncertainty in the phase density difference of 0.75% at a pressure of 1 MPa. This value is used as a percent of full scale for conservatism.

TABLE 4. UNCERTAINTY ANALYSIS - SECONDARY FULL RANGE LEVEL

Uncertainty Component	Uncertainty Estimate (bias)[a]
Differential Pressure Transmitter (Bailey Type BY)	
Accuracy[b]	0.5 % FS
Electronic Setup (tolerance)[c]	1.03% FS
Temperature Sensitivity[d]	1.1 % FS
Pressure Sensitivity[e]	0.1 % FS
Stability (long term drift)[f]	0.25% FS
Recording on Plant Computer[g]	0.11% FS
TOTAL BASE UNCERTAINTY	1.61% FS
Conversion to Interface Level [Equation (4)]	
Reference Leg Density[h]	1.6 % FS
Reference Leg Level (±10 cm)[i]	0.7 % FS
Distance between Taps[j]	0.1 % FS
Secondary Phase Densities[k]	0.75% FS
TOTAL UNCERTAINTY	2.49 % FS (±37 cm)

a. The uncertainty estimates given were obtained from various sources, which are listed in the following footnotes. The uncertainty estimates are given for the 95% confidence level, and are all considered to be bias estimates due to the total lack of any statistically significant data. Estimates are given in terms of percent of transmitter full scale (FS) range span, with FS=1468 cm used.

b. The source of uncertainties in the transmitter (accuracy) is the Bailey transmitter manual (see Reference 9).

c. The tolerance in electronic setup of the transmitter amplifier is given on the instrument calibration data sheet.

d. This estimate is based upon the stated temperature effects within the operational range of -20 - 160°F, of 0.01% FS/°F (see Reference 9). The maximum reported (see Reference 10) error for elevated temperatures (270°F), under postulated accident conditions, is 5% observed zero offset. Since the maximum observed reactor building temperature was 175°F, the 5% value is probably much too large, therefore a value of the stated temperature effect within the operational range is used [1.1% FS = (.01% FS/°F • (175-68°F))].

TABLE 4. (continued)

e. The pressure sensitivity is calculated using the value given in Reference 9 as, (1.05×10^{-4} % FS/psi • 910 psi) = 0.1% FS.

f. Drift is based upon 0.15%/3 months given in Reference 9, with a 5 month period since the last instrument calibration.

g. The uncertainty estimate for the plant computer is based upon Reference 12.

h. Assumed reference leg temperature is 125°F in Equation (5). Maximum recorded reactor building temperature was 175°F. Assuming this temperature was the actual reference leg temperature during portions of the accident, and a secondary pressure of 900 psia, results in the tabulated uncertainty.

i. An uncertainty component for uncertainty in the liquid level in the reference leg of the differential pressure sense line of ±10 cm is included. This is based upon engineering judgment of possible voiding in the reference leg during depressurization.

j. An uncertainty in knowledge of the distance between sense line taps of 1 cm is assumed.

k. The secondary phase densities used in Equation (5) were obtained from the steam tables using the measured secondary pressure and assuming saturation conditions. From Reference 13, the uncertainty in the pressure measurement is ±0.11 MPa which results in an uncertainty in the phase density difference of 0.75% at a pressure of 1 MPa. This value is used as a percent of full scale for conservatism.

5. CONCLUSIONS

The OTSG secondary level measurement systems have been described. The levels recorded on the reactimeter have been converted into a common measurement basis, which allows for direct comparison between the operating and start-up level measurements. Uncertainty analyses for these measurements have been presented, and the measurements have been assigned data qualification categories of "Qualified." The two overlapping level measurements in each OTSG have been combined to obtain best estimates of the secondary levels. These composite levels have uncertainties of ±17 cm for the range of 15-550 cm, and ±23 cm for the range of 550-1047 cm. These composite levels are the best available levels for use as boundary conditions of the OTSG secondaries during thermal-hydraulic analysis of the accident.

6. REFERENCES

1. Bailey Meter Co., Static Function Generator Part No. 6618600-1, "Bailey Product Instructions", Section E92-15, 1965.

2. Bailey Meter Co., Multiplier Part No. 6618210-1, "Bailey Product Instructions", Section E92-12, 1965.

3. General Public Utilities, "Module Calibration Sheet - NNI System - Steam Plant - SG Level"

4. B&W, Once-Through Steam Generator - Instruction Manual, June 1975.

5. J. L. Anderson, TMI-2 Once Through Steam Generator Auxiliary Feedwater Injection Rates, EGG-TMI-7481, January, 1987.

6. Data Qualification and Uncertainty Analysis, Appendix A, "TMI-2 Data Analysis and Data Base Development Program," TMI-2 Accident Evaluation Program, 1986.

7. Measurement Uncertainty for Fluid Flow in Closed Conduits, ANSI/ASME MFC-2M-1983.

8. R. B. Abernethy, R. P. Benedict, "Measurement Uncertainty: A Standard Methodology," ISA Transactions, Vol. 24, Number 1, 1985.

9. Bailey Meter Co., Process Computer Transmitter Type BY Series II, Product Instruction Manual, E21-17, 1971.

10. Bailey Meter Co., Engineering Division, Elevated Environment Qualification of Bailey BY Differential Pressure Transmitter, Report # 2482, January 15, 1972.

11. General Public Utilities, Three Mile Island Nuclear Station Unit #2 - Surveillance Procedure 2302-R17 - Steam generator Water Level, Revision 3, July 19, 1978.

12. Bailey 855 Computer Manual, Section 8.3.

13. J. L. Anderson, Steam Generator Secondary Pressures - Data Qualification Document, July 1986.

APPENDIX A

SUPPORTING CALCULATIONS FOR UTSG MEASUREMENT ANALYSIS

APPENDIX A

SUPPORTING CALCULATIONS FOR

OTSG MEASUREMENT ANALYSIS

Pressure Drop Across Steam Aspirator

The B&W Once-Through Steam Generator (OTSG) uses a steam aspirator to preheat the subcooled feedwater in the downcomer section before the feedwater enters the riser section of the OTSG. This system is shown schematically in Figure A-1. In order to compare the level measurements in the downcomer and the riser sections, knowledge of the pressure drop across the aspirator opening is required. Calculation of the pressure drop requires knowledge of the steam mass flow rate from the riser into the downcomer, m_{steam}. This flow rate can be calculated from knowledge of the feedwater flow rate and temperature, and a mass and energy balance. The values of pertinent parameters for the initial condition prior to the feedwater pump trip are listed in Table A-1. Using the nomenclature shown in Figure A-1, the mass and energy balances can be performed as follows.

Mass Balance

The total mass flowing through the adjustable downcomer orifice, and into the riser section, m_{or}, is the sum of the feedwater flow rate, m_{feed}, and the steam mass flow rate through the aspirator, m_{steam}, as;

$$\dot{m}_{or} = \dot{m}_{feed} + \dot{m}_{steam} \qquad \text{(A-1)}$$

Energy Balance

The total energy flow through the downcomer orifice into the riser can be obtained from the individual mass flow rates and the enthalpies for each fluid flow (assuming saturated steam flow through the aspirator and saturated liquid flow through the orifice). This can be written as;

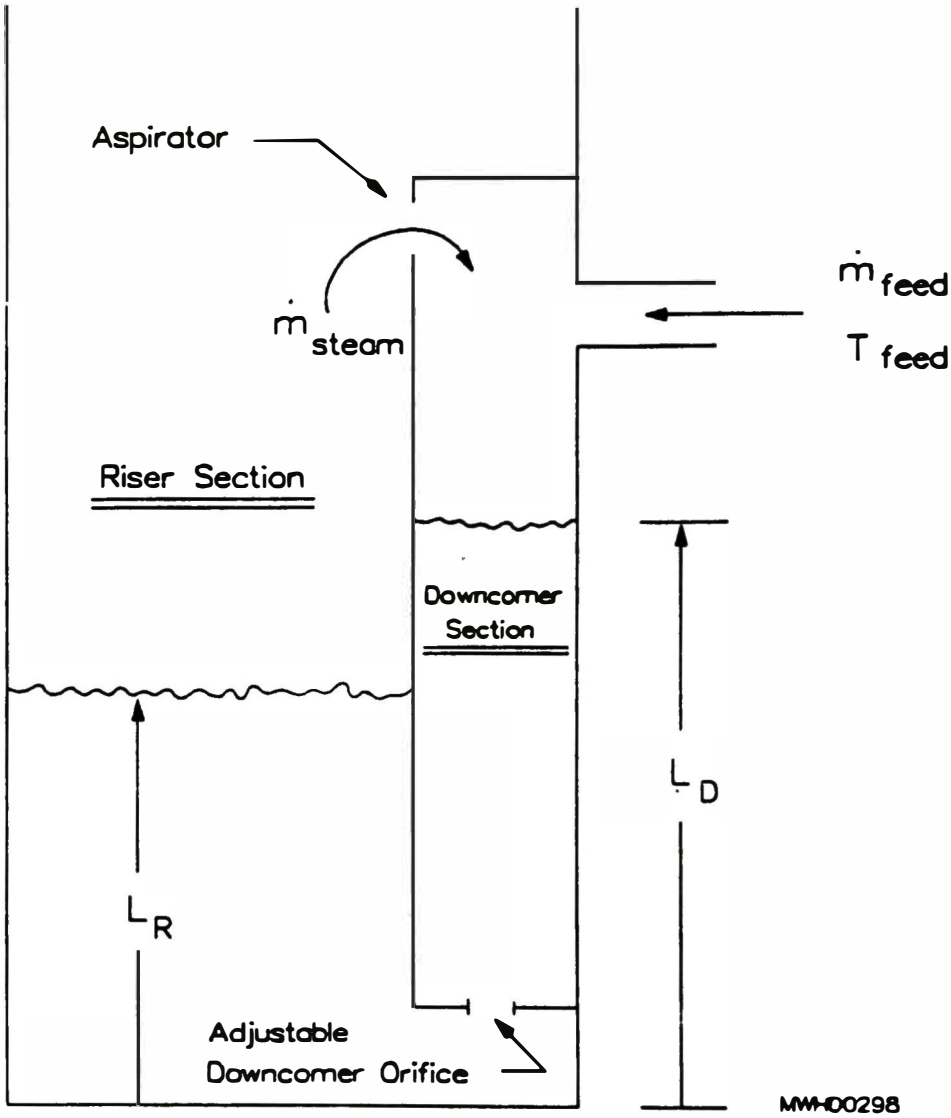

Figure A-1. Schematic of Lower UTSG.

TABLE A-1. SUMMARY OF OTSG INITIAL CONDITIONS CALCULATIONS

Parameter	A-Loop OTSG	B-Loop OTSG
Pressure (MPa)[a]	6.38	6.24
Saturated Properties		
Temperature (K)	552.7	551.3
Enthalpy-steam(MJ/kg)	2.7806	2.7822
Enthalpy-liquid(MJ/kg)	1.2348	1.2271
Density-steam (kg/m^3)	32.97	32.17
Density-liquid (kg/m^3)	751.3	753.9
Feedwater		
Mass flow rate (kg/s)	722.4	717.6
Temperature (K)	513.2	513.2
Enthalpy (MJ/kg)	1.0382	1.0382
Levels (cm)		
Downcomer	660.0	668.7
Riser	525.8	538.3
Downcomer Orifice Parameters		
Pressure drop (kPa)	9.45	9.22
Loss coefficient	1.483	1.487
Mass flow rate (kg/s)	814.3	804.8
Exhaust Steam		
Temperature (K)	586.1	585.5
Enthalpy (MJ/kg)	2.9019	2.9045
Secondary Power (MW)	1,346	1,339

a. The pressure given is the average (-10 - -0.1 min.) absolute pressure measured at the steam line and recorded on the reactimeter.

$$\dot{m}_{or}\ h_f = \dot{m}_{steam}\ h_g + \dot{m}_{feed}\ h_{feed} \qquad \text{(A-2)}$$

where

h_f = the enthalpy of saturated liquid leaving the downcomer, obtained from the steam tables using the secondary pressure (MJ/kg)

h_g = the enthalpy of saturated steam entering the downcomer through the aspirator, obtained from the steam tables using the secondary pressure (MJ/kg)

h_{feed} = the enthalpy of the subcooled feedwater liquid from the steam tables using the measured feedwater temperature and the secondary pressure (MJ/kg).

Steam Flow Rate

Equation (A-1) and Equation (A-2) can be solved for the steam mass flow rate through the aspirator, resulting in;

$$\dot{m}_{steam} = \frac{(h_f - h_{feed})}{(h_g - h_f)} \cdot \dot{m}_{feed} \quad . \qquad \text{(A-3)}$$

Substituting the initial condition values of the enthalpies into Equation (A-3) results in;

$$\dot{m}_{steam} = 0.127 \cdot \dot{m}_{feed} \quad .$$

Pressure Drop Across Aspirator

Knowing the mass flow rate through the aspirator, the pressure drop across the aspirator can be calculated. The pressure drop, DP_{as}, can be expressed as;

$$\Delta P_{as} = \frac{1}{2} K/\rho_g \cdot (\dot{m}_{steam}/A_{as})^2 \qquad \text{(A-4)}$$

where

K = the loss coefficient for the aspirator (nondimensional)

= 1.95 (from Reference A-1)

ρ_g = the steam density (kg/m^3)

A_{as} = the area of the aspirator (m^2)

= 0.972 m^2 (from Reference A-1).

Substituting the steam mass flow rate and the initial condition parameter values for the A-loop OTSG from Table A-1 into Equation (A-4) results in a value for the pressure drop across the aspirator of;

ΔP_{as} = 264 Pa = 2.7 cm of water at 4°C.

This pressure drop should be insignificant in the comparison of the downcomer and riser levels.

Downcomer Orifice Loss Coefficient

Installed in the bottom of the OTSG downcomer is an adjustable orifice. This orifice is comprised of two concentric plates, each with 24 rectangular holes of 10 x 21.6 cm (4 x 8 1/2 inch) dimensions. The upper plate is movable relative to the lower plate, thus the orifice flow area is adjustable. The purpose of this variable area is to allow adjustment of the pressure drop across the orifice, and thus the downcomer level, to increase system stability at full power operation. The adjusted position existing at the time of the accident is unknown. However, the orifice position was initially set during fabrication to an opening size of

10 x 10.8 cm (4 x 4 1/4 inch).[A-2] In the following analysis this opening size will be used to calculate the flow area, and a loss coefficient calculated based upon this flow area (A_{or} = 0.2632 m^2) and the measured parameters. The methodology is to use the difference in the initial downcomer and riser levels as the differential pressure across the orifice, and combining with the total orifice mass flow rate, m_{or}, calculated from Equation (A-1). The loss coefficient, K, is defined by Equation (A-3), which can be solved to obtain;

$$K = \frac{2 \cdot \rho_f \cdot DP_{or}}{(\dot{m}_{or}/A_{or})^2} \qquad \text{(A-5)}$$

where the differential pressure across the orifice, DP_{or}, is obtained from the difference in the initial riser and downcomer levels, L_R and L_D, by;

$$DP_{or} = (\rho_f - \rho_g) \cdot g \cdot (L_D - L_R) \quad . \qquad \text{(A-6)}$$

The initial values of DP_{or} for both OTSGs are tabulated in Table A-1. Using these values and the other initial conditions in Equation (A-5) results in the loss coefficient values tabulated in Table A-1.

REFERENCES

A-1 C. D. Fletcher, TMI/OCONEE RELAP Modelling Notebook, page 77, March 1982.

A-2 Babcock & Wilcox, Once-Through Steam Generator - Instruction Manual, B&W 620-0006-55, June 1975.

B